Int. J. Appl. Math. Comput. Sci., 2006, Vol. 16, No. 3, 309–323

MINIMAX LQG CONTROL†

IAN R. PETERSEN

School of Information Technology and Electrical Engineering
University of New South Wales at the Australian Defence Force Academy
Canberra ACT 2600, Australia
e-mail: irp@ee.adfa.edu.au

This paper presents an overview of some recent results concerning the emerging theory of minimax LQG control for uncertain systems with a relative entropy constraint uncertainty description. This is an important new robust control system design methodology providing minimax optimal performance in terms of a quadratic cost functional. The paper first considers some standard uncertainty descriptions to motivate the relative entropy constraint uncertainty description. The minimax LQG problem under consideration is further motivated by analysing the basic properties of relative entropy. The paper then presents a solution to a worst case control system performance problem which can be generalized to the minimax LQG problem. The solution to this minimax LQG control problem is found to be closely connected to the problem of risk-sensitive optimal control.

Keywords: stochastic uncertain system, minimax control, LQG control, risk-sensitive control, output-feedback control, robust control

1. Introduction

The aim of this paper is to present the main ideas underlying the emerging area of minimax LQG control theory which is a special case of a more general stochastic minimax optimal control theory based on risk sensitive control. In this control problem, a particular class of stochastic uncertain systems is considered and an output feedback controller is sought to minimize the worst case of a cost functional. A complete description of stochastic minimax optimal control theory based on risk sensitive control can be found in the references (Boel *et al.*, 2002; Dupuis *et al.*, 2000; Petersen *et al.*, 2000a; 2000b; Ugrinovskii and Petersen, 1997; 1999a; 1999b; 2001a; 2001b; 2002a; 2002b). The main contribution of this paper is to provide a unified presentation of stochastic minimax optimal control concentrating on the discrete time linear quadratic Gaussian case. Our approach enables us to present straightforward proofs starting from performance analysis results and then developing output feedback controller synthesis results. Also, we present fundamental duality results in a simple finite dimensional setting to allow their significance to be more easily understood.

A key feature of stochastic minimax optimal control theory described in the above-mentioned papers is the use of relative entropy in the uncertainty description. This enables the minimax optimal control problem to be solved via the use of risk sensitive control theory. Underlying this fact is a certain duality between relative entropy and free energy which arises in probability theory. This idea is developed in the next section.

Note that the notions of minimax LQG control and stochastic uncertain systems developed in this paper and the papers mentioned above can also be extended to other areas of control and systems theory. For example, the paper (Yoon *et al.*, 2004) uses this approach to solve a problem of robust filtering, the paper (Yoon and Ugrinovskii, 2003) solves a minimax LQG tracking problem and the paper (Yoon *et al.*, 2005) considers the worst uncertainty in a minimax LQG problem. Also, the papers (Xie *et al.*, 2004a; 2004b; 2005a; 2005b) consider problems of uncertainty modeling and robust state estimation for uncertain hidden Markov models using a relative entropy constraint uncertainty description.

2. Uncertainty Descriptions

In order to motivate the relative entropy constraint uncertainty description from a practical point of view, we now consider the general issue of uncertainty modeling.

In designing any feedback control system, a fundamental requirement is that of robustness. Indeed, the enhancement of robustness is one of the main reasons for using feedback, see, e.g., (Horowitz, 1963). The robustness

† This work was supported by the Australian Research Council. A preliminary version of this paper appeared at the conference *Methods and Models in Automation and Robotics*, Międzyzdroje, Poland, 2000.

of a control system is its ability to maintain an adequate performance in the face of variations in plant dynamics and errors in the plant model which is used for controller design. Thus, in order to design a robust control system, one must define the type of uncertainties the control system is to be robust against. Within the modern control framework, one approach to designing robust control systems is to begin with a plant model which not only models the nominal but also models the type of uncertainties which are expected. Such a plant model is referred to as an uncertain system.

There are many types of uncertain system models and the form of the model to be used depends on the type of uncertainty to be expected and the tractability of robust control problem corresponding to this uncertain system model. In many cases, it is useful to enlarge the class of uncertainties in the uncertain system model in order to obtain a tractable control system design problem. This process may, however, lead to a conservative control system design. Thus, much of robust control theory can be related to a trade-off between the conservatism of the uncertain system model used and the tractability of the corresponding robustness analysis and robust controller synthesis problems.

Uncertainty in a given plant model may arise from a number of different sources. Some common sources of uncertainty are as follows:

(i) Uncertainty in a parameter value in the system model which may be either constant or time varying, e.g., uncertainty in a resistance value in an electrical circuit.

(ii) Uncertainty due to the neglecting of some system dynamics, e.g., the effect of neglecting parasitic capacitances in an electrical circuit.

(iii) Uncertainty due to the effect of ignoring nonlinearities in the system.

An important class of uncertain system models involves separating the nominal system model from the uncertainty in the system in a feedback interconnection, see Fig. 1.

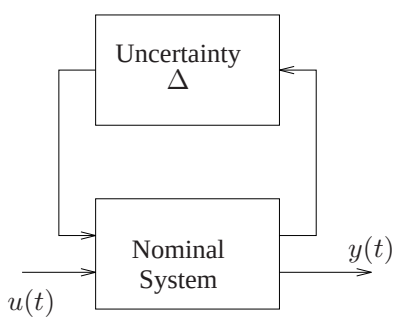

Fig. 1. Uncertain system model block diagram.

Such a feedback interconnection between the nominal model and uncertainty is sometimes referred to as an Linear Fractional Transformation (LFT), see, e.g., (Doyle *et al.*, 1991). In such an uncertain system model, the uncertainty operator Δ is typically a quantity which is unknown but bounded in magnitude. Thus, the class of uncertain systems is determined by the allowable form of the uncertainty Δ and the way it is bounded in magnitude. Some common uncertainty classes are as follows:

(i) $\Delta(t)$ is a real time-varying uncertain matrix bounded in norm:

$$\|\Delta(t)\| \leq 1 \text{ for all } t.$$

(ii) $\Delta(s)$ is a stable uncertain transfer function matrix bounded in norm at all frequencies:

$$\|\Delta(j\omega)\| \leq 1 \text{ for all } \omega > 0.$$

This amounts to a bound on the H^∞ norm of the transfer function $\Delta(s)$.

Here $\|\cdot\|$ denotes the induced matrix norm.

2.1. Uncertain Systems with Integral Quadratic Constraints. The integral quadratic constraint uncertainty description can be regarded as a deterministic counterpart to the relative entropy constraint uncertainty description considered in this paper, see, e.g., (Petersen *et al.*, 2000b). In order to motivate the integral quadratic constraint uncertainty description, first consider a transfer function uncertainty block as shown in Fig. 2, where $\Delta(s)$ is a stable transfer function matrix.

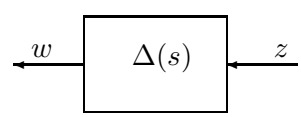

Fig. 2. Transfer function uncertainty.

Using Parseval's theorem, it follows that the frequency domain bound

$$\|\Delta(j\omega)\| \leq 1 \text{ for all } \omega > 0$$

is equivalent to the time domain bound

$$\int_0^\infty \|w(t)\|^2 \,\mathrm{d}t \leq \int_0^\infty \|z(t)\|^2 \,\mathrm{d}t \tag{1}$$

for all signals $z(t)$ (provided these integrals exist). The time domain uncertainty bound (1) is called an Integral Quadratic Constraint (IQC). Alternatively, if we are only interested in a finite horizon control problem, we can consider the finite horizon IQC:

$$\int_0^T \|w(t)\|^2 \,\mathrm{d}t \leq \int_0^T \|z(t)\|^2 \,\mathrm{d}t. \tag{2}$$

This time domain uncertainty bound applies equally well to the case of a time-varying real uncertainty parameter $\Delta(t)$ or a nonlinear mapping. A key feature of the IQC uncertainty description is that the uncertainty is described purely in terms of bounds on the signals $z(t)$ and $w(t)$ rather than bounding the uncertainty Δ directly.

The integral quadratic constraint uncertainty description can be extended to model energy bounded noise acting on the system as well as the uncertainty in system dynamics. This situation is illustrated in Fig. 3. Here $\tilde{w}(t)$ represents energy bounded noise acting on the system.

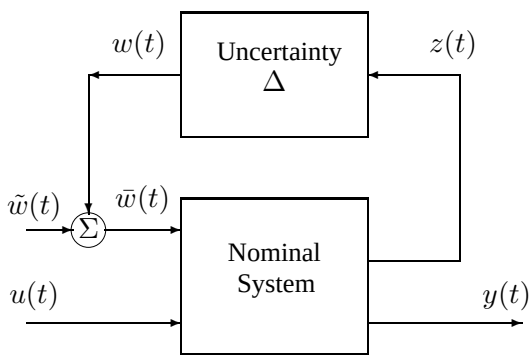

Fig. 3. Uncertain system with noise inputs.

To model this situation of both noise and uncertain dynamics, we would modify the integral quadratic constraint (1) to

$$\int_0^T \|w(t)\|^2 \,\mathrm{d}t \le d + \int_0^T \|z(t)\|^2 \,\mathrm{d}t, \tag{3}$$

where $d > 0$ is a constant which determines the bound on the size of the noise (again assuming that the integrals exist). If the signal $z(t)$ is zero, the uncertainty block Δ makes no contribution to the signal $\bar{w}(t)$ (assuming a zero initial condition on the dynamics of the uncertainty block). However, $\bar{w}(t)$ can still be nonzero due to the presence of the noise signal. This IQC modeling of noise corresponds to an energy bound on the noise rather than a stochastic white noise description. Also note that the presence of the d term in the IQC (3) can allow for a nonzero initial condition on uncertainty dynamics.

The discrete-time version of the IQC uncertainty description is referred to as the Sum Quadratic Constraint (SQC) uncertainty description, see, e.g., (Moheimani *et al.*, 1997). In this case, the constraint (3) is replaced by the constraint

$$\sum_{k=0}^{N} \|\bar{w}(k)\|^2 \le d + \sum_{k=0}^{N} \|z(k)\|^2. \tag{4}$$

2.2. Stochastic Uncertain Systems. In the above IQC and SQC uncertainty descriptions, noise signals were allowed but they were required to be $\mathbf{L}_2$ norm bounded noises. In many applications, it would be more appropriate to consider noise signals which are stochastic white noise signals. This is particularly true when considering output-feedback minimax optimal control problems. In order to consider stochastic white noise signals, we must introduce a suitable class of stochastic uncertain systems. Our approach is to extend the IQC or SQC uncertainty description to a stochastic uncertainty constraint involving the concept of relative entropy, see, e.g., (Dupuis and Ellis, 1997). This uncertainty constraint is a constraint on the probability distribution of the uncertainty and noise processes for the uncertain system. This is as opposed to the IQC and SQC uncertainty descriptions, which impose a constraint on the uncertainty and noise signals themselves.

The relative entropy constraint uncertainty description was first proposed in (Petersen *et al.*, 2000a) for the finite-horizon discrete-time case, and in (Ugrinovskii and Petersen, 1999a) for the finite-horizon continuous-time case (see also (Petersen *et al.*, 2000b; Ugrinovskii and Petersen, 1999a)). The advantage of the relative entropy constraint uncertainty description is that it enables one to obtain a tractable solution to the corresponding output feedback minimax LQG optimal control problem. This is achieved by converting the minimax LQG control problem into an equivalent risk sensitive control problem which can be solved using the existing methods.

We consider a discrete-time stochastic uncertain system described in terms of a reference or a nominal system and a perturbed system. The reference system is described by the following state equations defined on the time interval $\{0, 1, \ldots, N\}$:

$$\begin{aligned} x(k+1) &= Ax(k) + Bu(k) + Dw(k), \\ y(k) &= Cx(k) + v(k). \end{aligned} \tag{5}$$

Here $x(k) \in \mathbb{R}^n$, $u(k) \in \mathbb{R}^m$, $w(k) \in \mathbb{R}^p$, $y(k) \in \mathbb{R}^l$, and $v(k) \in \mathbb{R}^l$. In the above system, the initial condition and noise input sequence

$$\begin{bmatrix} x_0 \\ w(0) \\ w(1) \\ \vdots \\ w(N) \\ v(0) \\ v(1) \\ \vdots \\ v(N) \end{bmatrix} \in \mathbb{R}^{(N+1)(p+l)+n}$$

is assumed to be a white noise random process defined by a Gaussian probability density function $\mu(\cdot)$:

$$\mu(w_{0N}, v_{0N}, x_0) = \prod_{k=0}^{N} \theta\big(w(k)\big) \prod_{k=0}^{N} \eta\big(v(k)\big)\psi(x_0), \quad (6)$$

where

$$\theta(w) = \big[(2\pi)^r\big]^{-\frac{1}{2}} \exp\Big[-\frac{1}{2}\|w\|^2\Big],$$

$$\eta(v) = \big[(2\pi)^l\big]^{-\frac{1}{2}} \exp\Big[-\frac{1}{2}\|v\|^2\Big],$$

$$\psi(x) = \big[(2\pi)^n \det(\bar{\Sigma}_0)\big]^{-\frac{1}{2}} \times \exp\Big[-\frac{1}{2}(x-\check{x}_0)^T\Sigma_0^{-1}(x-\check{x}_0)\Big].$$

Here the notations w_{0N} and v_{0N} refer to the noise sequences $\{w(k)\}_{k=0}^N$ and $\{v(k)\}_{k=0}^N$, respectively. Thus, the initial condition x_0 is a Gaussian random variable with the mean $\check{x}_0$ and the covariance matrix $\Sigma_0 > 0$. Note that it would be straightforward to generalize the results of this paper to allow for more general covariance matrices for w_{0N} and v_{0N}, including the coupling between $w(k)$ and $v(k)$. However, this would lead to a more complicated algebra describing the minimax LQG optimal controller.

Also, the perturbed system is described by the state equations

$$\begin{aligned} x(k+1) &= Ax(k) + Bu(k) + D\bar{w}(k), \\ z(k) &= E_1x(k) + E_2u(k), \\ y(k) &= Cx(k) + \bar{v}(k), \end{aligned} \quad (7)$$

where $z(k) \in \mathbb{R}^q$. The x_0 initial condition and noise input sequence for the perturbed system is a random process defined by an unknown probability density function $\nu(\cdot)$. The relative entropy constraint defined below defines the allowable 'distance' between the probability density functions $\mu(\cdot)$ and $\nu(\cdot)$. Note that the quantity $z(k)$ is a signal which defines the set of allowable uncertain noise probability measures via the relative entropy constraint. Note also that $z(k)$ can be interpreted in a similar way to the quantity $z(t)$ in Fig. 3 corresponding to the deterministic IQC uncertainty description. The matrices E_1 and E_2 in the equation for $z(k)$ are known matrices which form part of the uncertain system model.

The following relative entropy constraint for the above stochastic uncertain system is a natural generalization of the SQC (4): Let $d > 0$ be a given constant. Then a probability density function $\nu(\cdot)$ defines an admissible perturbed noise random process if

$$R\big(\nu(\cdot)\|\mu(\cdot)\big) - \mathbf{E}_\nu\left[\frac{1}{2}\sum_{k=0}^{N}\|z(k)\|^2 + d\right] \le 0. \quad (8)$$

Here $\mathbf{E}_\nu$ denotes expectation with respect to the probability density function $\nu(\cdot)$. Also, $R(\nu(\cdot)\|\mu(\cdot))$ denotes relative entropy between the probability density functions $\mu(\cdot)$ and $\nu(\cdot)$, i.e.,

$$R\big(\nu(\cdot)\|\mu(\cdot)\big) = \begin{cases} \displaystyle\int_{\mathbb{R}^M} \nu(\eta)\log\frac{\nu(\eta)}{\mu(\eta)}\,\mathrm{d}\eta \\ \qquad \text{if } \nu(\eta) << \mu(\eta) \,\&\, \log\dfrac{\nu(\eta)}{\mu(\eta)} \in \mathbf{L}_1, \\ +\infty \qquad\qquad \text{otherwise.} \end{cases}$$

Note that $\nu(\eta) << \mu(\eta)$ denotes the fact that the probability density $\nu(\eta)$ is absolutely continuous with respect to the probability density $\mu(\eta)$. Also, note that the integer M is the total dimension of the initial condition and noise sequence space, $M = (N+1)(p+l)+n$. Furthermore, note that (5) and (7) define the set of admissible uncertainties in terms of admissible noise probability distributions. This amounts to a stochastic version of the SQC uncertainty description.

For a given output feedback controller $\mathcal{K}(\cdot)$, the set of all admissible probability density functions is denoted by $\Xi_{\mathcal{K}}$. Relative entropy is a measure of the 'distance' between the probability density function $\nu(\eta)$ and the probability density function $\mu(\eta)$. In the relative entropy constraint uncertainty description, the relative entropy is used to bound the error between the nominal probability distribution on the noise signal and a perturbed probability distribution on the noise signal due the presence of uncertainty. Details regarding the description of this stochastic uncertain system can be found in (Petersen *et al.*, 2000a).

Note that the uncertain system (5), (7) allows for uncertainties generated as in Fig. 3, where the uncertainty block satisfies the SQC (4). This issue will be further discussed in the next section.

3. Optimization and Relative Entropy

Underlying our solution to the minimax LQG control problem for the above class of stochastic uncertain systems is a certain duality result from probability theory known as the duality between relative entropy and free energy; see also (Dai Pra *et al.*, 1996; Dupuis and Ellis, 1997). In order to derive this result, we now consider some well-known properties of relative entropy; see (Dupuis and Ellis, 1997).

Lemma 1. *Given any probability density functions $\nu(\eta)$ and $\mu(\eta)$, $R(\nu(\cdot)\|\mu(\cdot)) \ge 0$ and $R(\nu(\cdot)\|\mu(\cdot)) = 0$ if and only if $\nu(\eta) = \mu(\eta)$ a.e.*

Proof. This lemma follows from the fact that $s\log s \ge s-1$ for all $s \in \mathbb{R}$ with equality if and only if $s = 1$.

From this, it follows that

$$\begin{aligned} R\big(\nu(\cdot)\|\mu(\cdot)\big) &= \int_{\mathbb{R}^M} \nu(\eta)\log\frac{\nu(\eta)}{\mu(\eta)}\,\mathrm{d}\eta \\ &= \int_{\mathbb{R}^M} \mu(\eta)\frac{\nu(\eta)}{\mu(\eta)}\log\frac{\nu(\eta)}{\mu(\eta)}\,\mathrm{d}\eta \\ &\geq \int_{\mathbb{R}^M} \mu(\eta)\left(\frac{\nu(\eta)}{\mu(\eta)}-1\right)\mathrm{d}\eta \\ &= \int_{\mathbb{R}^M} (\nu(\eta)-\mu(\eta))\,\mathrm{d}\eta \\ &= 1-1=0, \end{aligned}$$

where equality holds if and only if $\nu(\eta)/\mu(\eta) = 1$ a.e., i.e., $\nu(\eta) = \mu(\eta)$. ■

Lemma 2. *For a given probability density function $\mu(\cdot)$, $R(\nu(\cdot)\|\mu(\cdot))$ is a strictly convex function of $\nu(\cdot)$ on the set of probability density functions $\{\nu(\cdot) : R(\nu(\cdot)\|\mu(\cdot)) < \infty\}$*

Proof. This lemma follows from the strict convexity of the function $h(s) = s\log s$ for $s \in [0,\infty)$. Indeed,

$$R\big(\nu(\cdot)\|\mu(\cdot)\big) = \int_{\mathbb{R}^M} \mu(\eta)\frac{\nu(\eta)}{\mu(\eta)}\log\frac{\nu(\eta)}{\mu(\eta)}\,\mathrm{d}\eta,$$

from which strict convexity with respect to $\nu(\cdot)$ follows. ■

Lemma 3. *For a given probability density function $\mu(\cdot)$ and a bounded measurable function $J(\cdot) : \mathbb{R}^M \to \mathbb{R}$:*

$$\sup_{\nu(\cdot)}\left\{\int_{\mathbb{R}^M} J(\eta)\nu(\eta)\,\mathrm{d}\eta - R\big(\nu(\cdot)\|\mu(\cdot)\big)\right\} = \log\int_{\mathbb{R}^M} e^{J(\eta)}\mu(\eta)\,\mathrm{d}\eta, \tag{9}$$

where the supremum is taken over all probability density functions $\nu(\cdot)$ on $\eta \in \mathbb{R}^M$.

Proof. Let

$$\nu_0(\eta) = \mu(\eta)\frac{e^{J(\eta)}}{\int_{\mathbb{R}^M} e^{J(\tilde\eta)}\mu(\tilde\eta)d\tilde\eta}.$$

It follows immediately from this definition that $\nu_0(\eta)$ is a probability density function. We will prove that this probability density function achieves the supremum in (9).

In order to prove the lemma, it suffices to prove (9), where the supremum is taken over all probability density functions $\nu(\cdot)$ such that $R(\nu(\cdot)\|\mu(\cdot)) < \infty$. Now given any such probability density function $\nu(\cdot)$,

$$\begin{aligned} &\int_{\mathbb{R}^M} J(\eta)\nu(\eta)\,\mathrm{d}\eta - R\big(\nu(\cdot)\|\mu(\cdot)\big) \\ &= \int_{\mathbb{R}^M} J(\eta)\nu(\eta)\,\mathrm{d}\eta - \int_{\mathbb{R}^M} \nu(\eta)\log\frac{\nu(\eta)}{\mu(\eta)}\,\mathrm{d}\eta \\ &= \int_{\mathbb{R}^M} J(\eta)\nu(\eta)\,\mathrm{d}\eta - \int_{\mathbb{R}^M} \nu(\eta)\log\frac{\nu(\eta)}{\nu_0(\eta)}\frac{\nu_0(\eta)}{\mu(\eta)}\,\mathrm{d}\eta \\ &= \int_{\mathbb{R}^M} J(\eta)\nu(\eta)\,\mathrm{d}\eta - \int_{\mathbb{R}^M} \nu(\eta)\log\frac{\nu_0(\eta)}{\mu(\eta)}\,\mathrm{d}\eta \\ &\quad - \int_{\mathbb{R}^M} \nu(\eta)\log\frac{\nu(\eta)}{\nu_0(\eta)}\,\mathrm{d}\eta \\ &= \int_{\mathbb{R}^M} J(\eta)\nu(\eta)\,\mathrm{d}\eta - \int_{\mathbb{R}^M} \nu(\eta)\log\frac{e^{J(\eta)}}{\int_{\mathbb{R}^M} e^{J(\tilde\eta)}\mu(\tilde\eta)d\tilde\eta}\,\mathrm{d}\eta \\ &\quad - R\big(\nu(\cdot)\|\nu_0(\cdot)\big) \\ &= \int_{\mathbb{R}^M} J(\eta)\nu(\eta)\,\mathrm{d}\eta - \int_{\mathbb{R}^M} J(\eta)\nu(\eta)\,\mathrm{d}\eta \\ &\quad + \left(\log\int_{\mathbb{R}^M} e^{J(\tilde\eta)}\mu(\tilde\eta)d\tilde\eta\right)\int_{\mathbb{R}^M}\nu(\eta)\,\mathrm{d}\eta - R\big(\nu(\cdot)\|\nu_0(\cdot)\big) \\ &= \log\int_{\mathbb{R}^M} e^{J(\eta)}\mu(\eta)\,\mathrm{d}\eta - R\big(\nu(\cdot)\|\nu_0(\cdot)\big). \end{aligned}$$

Using Lemma 1, it follows that $R(\nu(\cdot)\|\nu_0(\cdot)) \geq 0$, and hence

$$\int_{\mathbb{R}^M} J(\eta)\nu(\eta)\,\mathrm{d}\eta - R\big(\nu(\cdot)\|\mu(\cdot)\big) \leq \log\int_{\mathbb{R}^M} e^{J(\eta)}\mu(\eta)\,\mathrm{d}\eta$$

for all probability density functions $\nu(\cdot)$ such that $R(\nu(\cdot)\|\nu_0(\cdot)) < \infty$. Furthermore, since $R(\nu(\cdot)\|\nu_0(\cdot)) = 0$ if and only if $\nu(\cdot) = \nu_0(\cdot))$ a.e., (9) follows. ■

Note that the above lemma corresponds to the duality between free energy and relative entropy; see (Dai Pra *et al.*, 1996; Dupuis and Ellis, 1997). Indeed, the quantity

$$\log\int_{\mathbb{R}^M} e^{J(\eta)}\mu(\eta)\,\mathrm{d}\eta$$

is called the free entropy of $J(\cdot)$ with respect to $\mu(\cdot)$, e.g., see (Dai Pra *et al.*, 1996). Then the expression (9) amounts to the standard Fenchel duality between free energy and relative entropy in the space of probability measures. That is, relative entropy is the Legendre transform of free energy.

Lemma 4. *Suppose the probability density functions $\nu(\eta)$ and $\mu(\eta)$ are both Gaussian with the identity covariance*

matrix and means $\bar{\eta}$ and zero, respectively:

$$\nu(\eta) = \left[(2\pi)^M\right]^{-\frac{1}{2}} \exp\left[-\frac{1}{2}\|\eta-\bar{\eta}\|^2\right],$$

$$\mu(\eta) = \left[(2\pi)^M\right]^{-\frac{1}{2}} \exp\left[-\frac{1}{2}\|\eta\|^2\right].$$

Then

$$R\big(\nu(\cdot)\|\mu(\cdot)\big) = \frac{1}{2}\|\bar{\eta}\|^2,$$

Proof. We have

$$\begin{aligned}
&R\big(\nu(\cdot)\|\mu(\cdot)\big)\\
&= \int_{\mathbb{R}^M} \nu(\eta)\log\frac{\nu(\eta)}{\mu(\eta)}\,\mathrm{d}\eta\\
&= \int_{\mathbb{R}^M}\Bigg(\left[(2\pi)^M\right]^{-\frac{1}{2}}\exp\left[-\frac{1}{2}\|\eta-\bar{\eta}\|^2\right]\\
&\qquad\times\left[-\frac{1}{2}\|\eta-\bar{\eta}\|^2+\frac{1}{2}\|\eta\|^2\right]\Bigg)\,\mathrm{d}\eta\\
&= \bar{\eta}'\int_{\mathbb{R}^M}\left[(2\pi)^M\right]^{-\frac{1}{2}}\exp\left[-\frac{1}{2}\|\eta-\bar{\eta}\|^2\right]\eta\,\mathrm{d}\eta\\
&\quad-\frac{1}{2}\|\bar{\eta}\|^2\int_{\mathbb{R}^M}\left[(2\pi)^M\right]^{-\frac{1}{2}}\exp\left[-\frac{1}{2}\|\eta-\bar{\eta}\|^2\right]\mathrm{d}\eta\\
&= \bar{\eta}'\bar{\eta}-\frac{1}{2}\|\bar{\eta}\|^2 = \frac{1}{2}\|\bar{\eta}\|^2
\end{aligned}$$

as required. ■

3.1. Simple optimization problem. Using the above properties of relative entropy, we will now solve a simple optimization problem. In the next section, this static optimization problem will be extended to a problem of worst case performance analysis for an uncertain control system.

Let $\mu(\cdot)$ be a given probability density function on $\mathbb{R}^M$, and let $J(\eta)$ and $F(\eta)$ be given real-valued functions of $\eta \in \mathbb{R}^M$. Also, we suppose there exists a vector $\eta_0 \in \mathbb{R}^M$ such that

$$F(\eta_0) < 0, \tag{10}$$

and also

$$\sup_{\nu(\cdot)} \mathbf{E}_\nu J(\eta) = \infty, \tag{11}$$

where the supremum is over all probability density functions on $\mathbb{R}^M$. This condition amounts to a growth condition on the cost function $J(\cdot)$.

We wish to calculate

$$J^* = \sup_{\nu(\cdot)}\big\{\mathbf{E}_\nu J(\eta) : R\big(\nu(\cdot)\|\mu(\cdot)\big) \le \mathbf{E}_\nu F(\eta)\big\}. \tag{12}$$

Here the supremum is over all probability density functions on $\mathbb{R}^M$ subject to the constraint $R(\nu(\cdot)\|\mu(\cdot)) \le \mathbf{E}_\nu F(\eta)$. This problem can be regarded as a problem of evaluating worst case performance, where $\mathbf{E}_\nu J(\eta)$ corresponds to the expected cost and the probability density function $\nu(\cdot)$ represents the uncertainty which is subject to the relative entropy constraint $R(\nu(\cdot)\|\mu(\cdot)) \le \mathbf{E}_\nu F(\eta)$.

In order to solve this constrained optimization problem, we first introduce a Lagrange multiplier in order to convert the constrained optimization problem into an unconstrained optimization problem. This relies on the following lemma, see pages 217–218 of (Luenberger, 1969).

Lemma 5. *Let X be a linear vector space and let Ω be a convex subset of X. Also, let f be a real-valued concave functional on Ω and let g be a real-valued convex functional on Ω. Assume there exists a point $x_1 \in \Omega$ such that $g(x_1) < 0$ (this is a constraint qualification condition), and let*

$$\mu_0 = \sup f(x) \quad \textit{subject to} \;\; x \in \Omega,\; g(x) \le 0. \tag{13}$$

If μ_0 is finite, then there exists $\tau \ge 0$ such that

$$\mu_0 = \sup_{x\in\Omega}\big\{f(x) - \tau g(x)\big\}. \tag{14}$$

In order to apply this lemma to the above optimization problem, we define an unconstrained optimization problem dependent on a Lagrange multiplier parameter τ:

$$\begin{aligned}
V_\tau &= \sup_{\nu(\cdot)}\big\{\mathbf{E}_\nu J(\eta) - \tau\left[R\big(\nu(\cdot)\|\mu(\cdot)\big) - \mathbf{E}_\nu F(\eta)\right]\big\}\\
&= \sup_{\nu(\cdot)}\big\{\mathbf{E}_\nu\left[J(\eta)+\tau F(\eta)\right] - \tau R\big(\nu(\cdot)\|\mu(\cdot)\big)\big\}.
\end{aligned} \tag{15}$$

Here the supremum is over all probability density functions on $\mathbb{R}^M$.

Theorem 1. *J^* is finite if and only if there exists $\tau > 0$ such that $V_\tau < \infty$. In this case,*

$$J^* = \min_{\tau>0} V_\tau. \tag{16}$$

Proof. We will prove this theorem using Lemma 5 with X as the linear vector space of functions $\mathbb{R}^M \to \mathbb{R}$. Ω is the set of probability density functions on $\mathbb{R}^M$, $f(\cdot)$ corresponds to $\mathbf{E}_\nu J(\eta)$ considered as a function of the probability density function $\nu(\cdot)$, and $g(\cdot)$ corresponds to $R(\nu(\cdot)\|\mu(\cdot)) - \mathbf{E}_\nu F(\eta)$ considered as a function of the probability density function $\nu(\cdot)$.

We first verify that the conditions of the lemma are satisfied. Indeed, it follows from the above definitions that Ω is a convex subset of X. Also, using Lemma 2, the functions $f(\cdot)$ and $g(\cdot)$ are concave and convex, respectively. Furthermore, from (10) it follows that the impulsive probability density function $\nu_0(\eta) = \delta(\eta - \eta_0)$ satisfies

$$g(\nu_0) = \mathbf{E}_{\nu_0} F(\eta) = F(\eta_0) < 0.$$

Hence, the conditions of the lemma are satisfied.

Now suppose $J^* = c < \infty$. It follows directly from Lemma 5 that there exists $\tau^* \geq 0$ such that

$$V_{\tau^*} = c < \infty. \tag{17}$$

Moreover, if $\tau^* = 0$, then

$$V_{\tau^*} = \sup_{\nu(\cdot)} \mathbf{E}_\nu J(\eta) = \infty$$

using (11). However, this contradicts (17) and thus $\tau^* > 0$.

Conversely, if there exists $\tau^* > 0$ such that

$$V_{\tau^*} = c < \infty,$$

then, given any probability density function $\nu(\cdot)$ such that $R(\nu(\cdot)\|\mu(\cdot)) \leq \mathbf{E}_\nu F(\eta)$, we have

$$\begin{aligned}\mathbf{E}_\nu J(\eta) &\leq \mathbf{E}_\nu J(\eta) - \tau\left[R\big(\nu(\cdot)\|\mu(\cdot)\big) - \mathbf{E}_\nu F(\eta)\right] \\ &\leq V_{\tau^*} = c < \infty.\end{aligned}$$

Hence,

$$\begin{aligned}J^* &= \sup_{\nu(\cdot)} \left\{\mathbf{E}_\nu J(\eta) : R\big(\nu(\cdot)\|\mu(\cdot)\big) \leq \mathbf{E}_\nu F(\eta)\right\} \\ &\leq c < \infty.\end{aligned}$$

This completes the proof of the first part of the theorem. To establish the second part of the theorem, we observe that, given any constant $\tau > 0$, it follows that for any $\nu(\cdot)$ satisfying $R(\nu(\cdot)\|\mu(\cdot)) \leq \mathbf{E}_\nu F(\eta)$ we have

$$\mathbf{E}_\nu J(\eta) - \tau\left[R\big(\nu(\cdot)\|\mu(\cdot)\big) - \mathbf{E}_\nu F(\eta)\right] \geq \mathbf{E}_\nu J(\eta).$$

Hence,

$$\begin{aligned}V_\tau &= \sup_{\nu(\cdot)} \left\{\mathbf{E}_\nu J(\eta) - \tau\left[R\big(\nu(\cdot)\|\mu(\cdot)\big) - \mathbf{E}_\nu F(\eta)\right]\right\} \\ &\geq \sup_{\nu(\cdot)} \left\{\mathbf{E}_\nu J(\eta) - \tau\left[R\big(\nu(\cdot)\|\mu(\cdot)\big) - \mathbf{E}_\nu F(\eta)\right] : \right. \\ &\qquad\qquad \left. R\big(\nu(\cdot)\|\mu(\cdot)\big) \leq \mathbf{E}_\nu F(\eta)\right\} \\ &\geq \sup_{\nu(\cdot)} \left\{\mathbf{E}_\nu J(\eta) : R\big(\nu(\cdot)\|\mu(\cdot)\big) \leq \mathbf{E}_\nu F(\eta)\right\} \\ &= J^*\end{aligned}$$

for all $\tau > 0$. Also, it follows from Lemma 5 that there exists $\tau^* \geq 0$ such that

$$V_{\tau^*} = J^*.$$

Moreover, if $\tau^* = 0$, then

$$J^* = V_{\tau^*} = \sup_{\nu(\cdot)} \mathbf{E}_\nu J(\eta) = \infty$$

using (11). However, this contradicts the fact that $J^* < \infty$, and thus $\tau^* > 0$. Hence, (16) has been established. ■

Remark 1. Note that the above theorem allows us to solve the constrained optimization problem (12) in terms of the unconstrained optimization problem (15) for $\tau > 0$. Now, for $\tau > 0$ we can use Lemma 3 to conclude

$$\begin{aligned}\frac{V_\tau}{\tau} &= \sup_{\nu(\cdot)} \left\{\mathbf{E}_\nu\left[\frac{J(\eta)}{\tau} + F(\eta)\right] - R\big(\nu(\cdot)\|\mu(\cdot)\big)\right\} \\ &= \log \mathbf{E}_\mu e^{\left[\frac{J(\eta)}{\tau} + F(\eta)\right]}.\end{aligned}$$

Combining this with Theorem 1, we obtain the following result:

Theorem 2. *J^* is finite if and only if there exists $\tau > 0$ such that*

$$\mathbf{E}_\mu e^{[J(\eta)/\tau + F(\eta)]} < \infty.$$

In this case,

$$J^* = \min_{\tau > 0} \tau \log \mathbf{E}_\mu e^{[J(\eta)/\tau + F(\eta)]}. \tag{18}$$

3.2. Example. To illustrate the above theorem, we consider an example in which

$$J(\eta) = \frac{1}{2}\|\eta\|^2, \quad F(\eta) \equiv \frac{1}{2},$$

$$\mu(\eta) = \left[(2\pi)^M\right]^{-\frac{1}{2}} \exp\left[-\frac{1}{2}\|\eta\|^2\right].$$

For given $\tau > 1$, we calculate

$$\begin{aligned}&\mathbf{E}_\mu e^{[J(\eta)/\tau + F(\eta)]} \\ &\quad= \int_{\mathbb{R}^M} \left[(2\pi)^M\right]^{-\frac{1}{2}} e^{[-\frac{1}{2}\|\eta\|^2]} \times e^{[\frac{1}{2\tau}\|\eta\|^2 + \frac{1}{2}]}\, \mathrm{d}\eta \\ &\quad= e^{\frac{1}{2}} \int_{\mathbb{R}^M} \left[(2\pi)^M\right]^{-\frac{1}{2}} e^{-\frac{1}{2}[1-\frac{1}{\tau}]\|\eta\|^2}\, \mathrm{d}\eta \\ &\quad= \sqrt{\frac{e}{1-\frac{1}{\tau}}} \int_{\mathbb{R}^M} \left[\frac{(2\pi)^M}{1-\frac{1}{\tau}}\right]^{-\frac{1}{2}} e^{-\frac{1}{2}[1-\frac{1}{\tau}]\|\eta\|^2}\, \mathrm{d}\eta \\ &\quad= \sqrt{\frac{e}{1-\frac{1}{\tau}}}.\end{aligned}$$

For $\tau \in (0,1)$, $\mathbf{E}_\mu e^{[J(\eta)/\tau + F(\eta)]} = \infty$. Hence,

$$\begin{aligned}J^* &= \min_{\tau > 1} \tau \log \sqrt{\frac{e}{1-\frac{1}{\tau}}} \\ &= \frac{1}{2} \min_{\tau > 1} \left[\tau - \tau \log\left(1 - \frac{1}{\tau}\right)\right] = 1.5731.\end{aligned}$$

Now suppose we consider a set of probability density functions defined as follows:

$$\Lambda = \Big\{\nu(\eta) = \big[(2\pi)^M\big]^{-\frac{1}{2}} \exp\Big[-\frac{1}{2}\|\eta-\bar{\eta}\|^2\Big] : \|\bar{\eta}\|^2 \le 1\Big\}.$$

Then it follows from Lemma 4 that for every $\nu(\cdot) \in \Lambda$,

$$R\big(\nu(\cdot)\|\mu(\cdot)\big) = \frac{1}{2}\|\bar{\eta}\|^2 \le \frac{1}{2}.$$

That is, every $\nu(\cdot) \in \Lambda$ satisfies the relative entropy constraint

$$R\big(\nu(\cdot)\|\mu(\cdot)\big) \le \mathbf{E}_\nu F(\eta).$$

Hence, for this example,

$$\begin{aligned}
&\sup_{\nu(\cdot)} \big\{\mathbf{E}_\nu J(\eta) : \nu(\cdot) \in \Lambda\big\} \\
&\quad \le \sup_{\nu(\cdot)} \big\{\mathbf{E}_\nu J(\eta) : R\big(\nu(\cdot)\|\mu(\cdot)\big) \le \mathbf{E}_\nu F(\eta)\big\} \\
&\quad = J^* = 1.5731.
\end{aligned}$$

This inequality can be interpreted as follows: Suppose the set Λ represents the true uncertainty in the problem being considered and this set is overbounded by the set of probability distributions satisfying the relative entropy constraint. The above inequality shows that the quantity J^* gives an easy way to calculate an upper bound on the true worst case value of the cost function. However, in this example, we can actually calculate the true worst case cost exactly.

Indeed for $\nu(\eta) = [(2\pi)^M]^{-\frac{1}{2}} \exp[-\frac{1}{2}\|\eta-\bar{\eta}\|^2]$, we calculate

$$\begin{aligned}
\mathbf{E}_\nu J(\eta) &= \mathbf{E}_\nu \frac{1}{2}\|\eta\|^2 \\
&= \frac{1}{2}\mathbf{E}_\nu \left\{\|\eta-\bar{\eta}\|^2 + 2\eta'\bar{\eta} - \|\bar{\eta}\|^2\right\} \\
&= \frac{1}{2}\left\{1 + 2\|\bar{\eta}\|^2 - \|\bar{\eta}\|^2\right\} \\
&= \frac{1}{2}\left\{1 + \|\bar{\eta}\|^2\right\}.
\end{aligned}$$

Hence, taking the supremum with respect to $\bar{\eta}$ such that $\|\bar{\eta}\|^2 \le 1$, we obtain

$$\sup_{\nu(\cdot)} \{\mathbf{E}_\nu J(\eta) : \nu(\cdot) \in \Lambda\} = 1,$$

compared to our upper bound of 1.5731. However, naturally our relative entropy constraint uncertainty description allows for a large larger class of perturbations in the probability measure $\nu(\cdot)$ other than mere perturbations in the mean. From a control systems point of view, the main advantage of the relative entropy constraint uncertainty description is fact that the problem of constructing an output feedback controller to minimize the expectation of the exponential of a quadratic cost is a standard risk sensitive control problem. This then gives us a way to solve a true minimax stochastic optimal control problem.

4. Worst Case Performance

In this section, we consider the problem of calculating the worst case performance for a stochastic uncertain system of the form (6)–(8) with $u(k) \equiv 0$. The solution to this problem then leads to a solution to the minimax LQG problem which will be considered in the next section.

We consider a stochastic uncertain system described by the state equations

$$\begin{aligned}
x(k+1) &= Ax(k) + D\bar{w}(k), \\
z(k) &= E_1 x(k),
\end{aligned} \tag{19}$$

the nominal noise probability distribution

$$\mu(w_{0N}) = \prod_{k=0}^{N} \theta\big(w(k)\big), \tag{20}$$

where

$$\theta(w) = \big[(2\pi)^r\big]^{-\frac{1}{2}} \exp\Big[-\frac{1}{2}\|w\|^2\Big],$$

and the relative entropy constraint

$$R\big(\nu(\cdot)\|\mu(\cdot)\big) - \mathbf{E}_\nu\left[\frac{1}{2}\sum_{k=0}^{N}\|z(k)\|^2 + d\right] \le 0. \tag{21}$$

In this case, the set of all admissible probability density functions is denoted by Ξ. Also, in this case we assume that the initial condition $x(0) = \tilde{x}_0$ is fixed and known.

As in Section 2.2, $\mu(\cdot)$ defines probability distribution on the initial condition and noise input for the nominal system. Also, $\nu(\cdot)$ defines probability distribution on the initial condition and noise input for the perturbed system.

We first consider the relationship between this stochastic uncertain system and uncertain systems in which uncertainty is described by an SQC. Indeed, consider the stochastic uncertain system defined by the state equation (19), the nominal noise distribution (20) and the sum quadratic constraint

$$\mathbf{E}\left[\frac{1}{2}\sum_{k=0}^{N}\big(\|\bar{w}(k)\|^2 - \|z(k)\|^2\big) - d\right] \le 0. \tag{22}$$

Here,

$$\bar{w}(k) = w(k) + \tilde{w}(k), \tag{23}$$

where $\tilde{w}(k)$ is the nominal noise process with probability distribution defined by $\mu(\cdot)$. This uncertainty description is considered in (Petersen and James, 1996). Using an argument similar to that in Lemma 4 and the chain rule for relative entropy (see Dupuis and Ellis, 1997), it follows that any admissible uncertainty for this uncertain system is an admissible uncertainty for the uncertain system (20)–(21). Thus, the relative entropy constraint uncertainty description includes all those uncertainties satisfying a standard SQC, including sector bounded nonlinear uncertainties and H^∞ norm bounded LTI uncertainties.

We consider the problem of characterizing, for the stochastic uncertain system (20)–(21), the worst case performance with respect to a cost functional defined to be

$$J = \frac{1}{2}\sum_{k=0}^{N} x(k)^T Q x(k). \tag{24}$$

The problem under consideration is to find

$$\sup_{\nu(\cdot)\in\Xi} \mathbf{E}_\nu J. \tag{25}$$

In order to solve this problem, we will require that the system (7) satisfy the following assumption:

Assumption 1.

$$\sup_{\nu(\cdot)} \mathbf{E}_\nu\{J\} = \infty.$$

In this assumption, we are effectively maximizing the cost functional (24) with respect to the noise input $w(k)$. Hence, this assumption amounts to a controllability type assumption with respect to the input $w(k)$, and an observability type assumption with respect to the cost functional (24).

As in the previous section, the first step in evaluating this quantity is to use a Lagrange multiplier technique to convert the problem from a constrained optimization problem into an unconstrained optimization one. Indeed, given a constant $\tau \in \mathbb{R}$, we define an augmented cost function as follows:

$$J_\tau = \frac{1}{2}\sum_{k=0}^{N} x(k)^T Q x(k) - \tau\left[R\big(\nu(\cdot)\|\mu(\cdot)\big) - \mathbf{E}_\nu\Big[\frac{1}{2}\sum_{k=0}^{N}\|z(k)\|^2 + d\Big]\right].$$

Now, we define V_τ to be the value of the corresponding unconstrained optimization problem:

$$V_\tau \triangleq \sup_{\nu(\cdot)} \mathbf{E}_\nu\{J_\tau)\}.$$

Also, we define a set $\Gamma \subset \mathbb{R}$ as $\Gamma \triangleq \{\tau \in \mathbb{R} : \tau > 0, \ \& \ V_\tau < \infty\}$. The following theorem is an application of Theorem 1 to the current problem of worst case performance analysis.

Theorem 3. *Consider the stochastic uncertain system (19), (21) with the cost functional J. Then the following conditions hold:*

(i) The supremum $\sup_{\nu(\cdot)\in\Xi} \mathbf{E}_\nu J$ is finite if and only if the set Γ is non-empty.

(ii) If the set Γ is non-empty, then

$$\sup_{\nu(\cdot)\in\Xi} \mathbf{E}_\nu J = \min_{\tau\in\Gamma} V_\tau. \tag{26}$$

Remark 2. For any $\tau > 0$, it is straightforward to verify that V_τ can be re-written as

$$V_\tau = \tau\left(W_\tau + d\right), \tag{27}$$

where

$$W_\tau \triangleq \sup_{\nu(\cdot)} \mathbf{E}_\nu\left\{\frac{\frac{1}{2}\sum_{k=0}^{N} x(k)^T Q x(k) + \frac{\tau}{2}\sum_{k=0}^{N}\|z(k)\|^2}{\tau} - R\big(\nu(\cdot)\|\mu(\cdot)\big)\right\}.$$

Hence, it follows from Theorem 3 that if $\Gamma \neq \emptyset$, we can write

$$\sup_{\nu\in\Xi} \mathbf{E}_\nu J = \min_{\tau\in\Gamma} \tau\left(W_\tau + d\right). \tag{28}$$

We now look at a risk sensitive method for evaluating the quantity W_τ. The following result follows using ideas similar to Lemma 3.

Lemma 6. *For each $\tau > 0$,*

$$W_\tau = \log \mathbf{E}_\mu\left\{\exp\Big[\frac{1}{2\tau}\sum_{k=0}^{N} x(k)^T Q x(k) + \frac{1}{2}\sum_{k=0}^{N}\|z(k)\|^2\Big]\right\}.$$

In this formula, the expectation $\mathbf{E}_\mu$ is evaluated for the reference system (5).

Remark 3. By evaluating W_τ using the above formula, the required worst case cost (25) can be found by solving the scalar optimization problem corresponding to (28). Also, note that it follows from (27) and the definition of W_τ that V_τ is a convex function of τ.

Using some standard results from risk-sensitive control theory (see, e.g., (Jacobson, 1973; Petersen *et al.*,

2000a)), the above formula for W_τ can be evaluated explicitly as follows:

$$W_\tau = \frac{1}{2\tau}\check{x}_0^T \Pi_0 \check{x}_0 - \frac{1}{2}\sum_{k=0}^{N} \log\left[\det\left(I - \Pi_{k+1}\frac{DD^T}{\tau}\right)\right], \quad (29)$$

where

$$\Pi_k = Q + \tau E_1^T E_1 + A^T\left(I - \Pi_{k+1}\frac{DD^T}{\tau}\right)^{-1}\Pi_{k+1}A,$$
$$\Pi_{N+1} = 0, \quad (30)$$

is such that

$$\rho(\Pi_{k+1}DD^T) < \tau$$

for all k. Here $\rho(\cdot)$ denotes the spectral radius of a matrix.

These formulas can be obtained from the state feedback result of (Jacobson, 1973; Eqns. (30)–(35)) by specializing to the case in which there is no control input. The formulas in (Jacobson, 1973) are derived using techniques such as dynamic programming along with the standard algebraic manipulations. For complete details on the derivation of these risk sensitive results, the reader should refer to (Collings *et al.*, 1996; Jacobson, 1973; Whittle, 1981).

From the formulas (29) and (27), we calculate V_τ to be

$$V_\tau = \frac{1}{2}\check{x}_0^T \Pi_0 \check{x}_0 - \frac{\tau}{2}\sum_{k=0}^{N} \log\left[\det\left(I - \Pi_{k+1}\frac{DD^T}{\tau}\right)\right] + \tau d.$$

The worst case value of the cost index is then obtained by optimizing V_τ over the parameter $\tau > 0$ as in (28).

In the problem of worst case performance analysis, we can also use the results of (Petersen and James, 1996) to calculate the worst case performance for the stochastic uncertain system with an SQC uncertainty description defined by the equations (20), (19), (22), (23). Indeed, using the results of (Petersen and James, 1996), it follows that the worst case performance for this case is given by

$$\min_{\tau>0} \bar{V}_\tau,$$

where

$$\bar{V}_\tau = \frac{1}{2}\check{x}_0^T \Pi_0 \check{x}_0 - \frac{1}{2}\sum_{k=0}^{N} \mathrm{tr}\left(\Pi_{k+1}DD^T\right) + \tau d$$

and Π_k is defined as in (30). Here $\mathrm{tr}\,(\cdot)$ denotes the trace operation. Thus, the relative entropy approach gives a result very similar to the SQC approach of (Petersen and James, 1996). However, because of the different definitions of uncertainty in (Petersen and James, 1996) as compared to the uncertainty considered in this paper, slightly different formulas for the worst case performance are obtained.

The advantage of the relative entropy approach is that it can be extended to the output feedback controller synthesis case in a tractable fashion. In contrast, the SQC approach of (Petersen and James, 1996) is tractable only in the state feedback controller synthesis case.

5. Minimax Optimal Control

In this section, we consider the problem of constructing an output feedback controller which minimizes the worst case performance for the stochastic uncertain system (6)–(8). In this case, our performance index is defined by

$$J = \frac{1}{2}x(N+1)^T Q_{N+1} x(N+1) + \frac{1}{2}\sum_{k=0}^{N}\left[x(k)^T Q x(k) + u(k)^T R u(k)\right], \quad (31)$$

where $Q \geq 0$ and $R > 0$.

Admissible Controllers: We consider causal output feedback controllers of the form

$$u(k) = \mathcal{K}(k, y(\cdot)|_0^k), \quad (32)$$

where $u(k) \in \mathbb{R}^m$ is the control input at the time k and $y(\cdot)|_0^k$ is the output sequence over the time interval $\{0, 1, \ldots, k\}$. The class of all such controllers is denoted by Λ.

Assumption. For any admissible controller $\mathcal{K} \in \Lambda$, the resulting closed loop system is such that

$$\sup_{\nu(\cdot)} \mathbf{E}_\nu J = \infty. \quad (33)$$

As in the previous section, this assumption is related to the controllability of the uncertain system with respect to the uncertainty input and the observability of the uncertain system with respect to the cost functional.

The minimax control problem under consideration in this section involves finding an admissible controller to minimize the worst case of the expectation of the cost functional (31). That is, we are concerned with the minimax control problem

$$\inf_{\mathcal{K}\in\Lambda} \sup_{\nu(\cdot)\in\Xi_{\mathcal{K}}} \mathbf{E}_\nu J. \quad (34)$$

In the following theorem, we show that this minimax optimal control problem can be replaced by a corresponding

unconstrained stochastic game problem. This stochastic game problem is defined in terms of the following augmented cost functional:

$$J_\tau = \frac{1}{2}x(N+1)^T Q_{N+1} x(N+1) + \frac{1}{2}\sum_{k=0}^{N}\left[x(k)^T Q x(k) + u(k)^T R u(k)\right] - \tau\left[R\big(\nu(\cdot)\|\mu(\cdot)\big) - d - \frac{1}{2}\sum_{k=0}^{N}\|z(k)\|^2\right],$$

where $\tau \geq 0$ is a given constant. In this stochastic game problem, the maximizing player input is a probability density function $\nu(\cdot)$, and the minimizing player input $u(k)$ is assumed to be generated by an output feedback controller of the form (32). We let $\tilde{V}_\tau$ denote the upper value in this game problem. That is,

$$\tilde{V}_\tau \triangleq \inf_{\mathcal{K}\in\Lambda}\sup_{\nu(\cdot)} \mathbf{E}_\nu[J_\tau]. \tag{35}$$

Also, we define a set $\tilde{\Gamma} \subset \mathbb{R}$ as

$$\tilde{\Gamma} \triangleq \big\{\tau \in \mathbb{R} : \tau \geq 0, \quad \tilde{V}_\tau \text{ is finite}\big\}.$$

It follows from the above assumption that zero is not contained in the set $\tilde{\Gamma}$.

The following theorem follows via arguments similar to the proof of Theorem 2, see (Petersen *et al.*, 2000a).

Theorem 4. *Consider the stochastic uncertain system (5), (7), (8) with the cost functional (31). Then the following conclusions hold:*

(i) For the minimax stochastic optimal control problem

$$\inf_{\mathcal{K}\in\Lambda}\sup_{\nu(\cdot)\in\Xi_{\mathcal{K}}} \mathbf{E}_\nu J, \tag{36}$$

the value of this optimal control problem is finite if and only if the set $\tilde{\Gamma}$ is non-empty.

(ii) If the set $\tilde{\Gamma}$ is non-empty, then

$$\inf_{\mathcal{K}\in\Lambda}\sup_{\nu(\cdot)\in\Xi_{\mathcal{K}}} \mathbf{E}_\nu J = \inf_{\tau\in\tilde{\Gamma}} \tilde{V}_\tau. \tag{37}$$

We now use the duality result developed in the previous section to convert the unconstrained stochastic game problem defining $\tilde{V}_\tau$ into an equivalent output feedback risk sensitive control problem which can be solved via existing methods.

For any $\tau > 0$, it is straightforward to verify that the quantity $\tilde{V}_\tau$ can be re-written as $\tilde{V}_\tau = \tau\left(\tilde{W}_\tau + d\right)$, where

$$\tilde{W}_\tau \triangleq \inf_{\mathcal{K}\in\Lambda}\sup_{\nu(\cdot)} \mathbf{E}_\nu\Big\{\frac{1}{2\tau}x(N+1)^T Q_{N+1} x(N+1) + \frac{1}{2\tau}\sum_{k=0}^{N}\left[x(k)^T Q x(k) + u(k)^T R u(k)\right] + \frac{1}{2}\sum_{k=0}^{N}\|z(k)\|^2 - R\big(\nu(\cdot)\|\mu(\cdot)\big)\Big\}.$$

Hence, it follows from Theorem 4 that if $\tilde{\Gamma} \neq \emptyset$, we can write

$$\inf_{\mathcal{K}\in\Lambda}\sup_{\nu\in\Xi_{\mathcal{K}}} \mathbf{E}_\nu J = \inf_{\tau\in\tilde{\Gamma}} \tau\left(\tilde{W}_\tau + d\right). \tag{38}$$

The following theorem shows that the quantity $\tilde{W}_\tau$ can be obtained by solving an equivalent output feedback risk sensitive optimal control problem. The proof of this theorem follows along similar lines as the duality result given in Lemma 3, see (Petersen *et al.*, 2000a).

Theorem 5. *Given any constant $\tau > 0$,*

$$\tilde{W}_\tau = \inf_{\mathcal{K}\in\Lambda} J_{RS}, \tag{39}$$

where

$$J_{RS} = \log \mathbf{E}_\mu\Big\{\exp\Big[\frac{1}{2\tau}x(N+1)^T Q_{N+1} x(N+1) + \frac{1}{2\tau}\sum_{k=0}^{N}\left[x(k)^T Q x(k) + u(k)^T R u(k)\right] + \frac{1}{2}\sum_{k=0}^{N}\|z(k)\|^2\Big]\Big\}$$

and the probability measure $\mu(\cdot)$ is as defined by (6) for the reference system (5).

We now observe that the output feedback risk sensitive optimal control problem (39) is a standard problem which can be solved using the existing results, see, e.g., (Collings *et al.*, 1996; Petersen *et al.*, 2000a; Whittle, 1981). The solution to this stochastic optimal control problem is constructed as follows:

Filter Equations: Consider the following Riccati difference equation, which is solved forward in time:

$$\Sigma_{k+1} = DD^T + A\left[\Sigma_k^{-1} + C^T C - \frac{Q}{\tau} - E_1^T E_1\right]^{-1} A^T, \tag{40}$$

where the initial condition Σ_0 for this difference equation is defined by the nominal initial condition probability distribution (6). The solution to this difference equation is required to satisfy the following conditions:

$$\Sigma_k^{-1} + C^T C - \frac{Q}{\tau} - E_1^T E_1 > 0, \quad \Sigma_k > 0, \ \forall k. \quad (41)$$

Also, consider the following filter state equations:

$$\begin{aligned}\hat{x}(k+1) &= A\hat{x}(k) + Bu(k) + K_k\big[y(k) - C\hat{x}(k)\big] \\ &\quad + A\left[\Sigma_k^{-1} + C^T C - \frac{Q}{\tau} - E_1^T E_1\right]^{-1} \\ &\quad \times \left[\frac{Q}{\tau} + E_1^T E_1\right]\hat{x}(k), \ \ \hat{x}_0 = \check{x}_0, \quad (42)\end{aligned}$$

where

$$K_k = A\left[\ \Sigma_k^{-1} + C^T C - \tfrac{Q}{\tau} - E_1^T E_1\ \right]^{-1} C^T. \quad (43)$$

State Feedback Equations: As well as the above filter equations which are solved forward in time, the solution to the risk sensitive control problem (39) also involves the following Riccati difference equation, which is solved backwards in time:

$$\begin{aligned}\Pi_k &= Q + \tau E_1^T E_1 \\ &\quad + A^T\Big[lI - \Pi_{k+1}\frac{DD^T}{\tau} \\ &\quad + \Pi_{k+1}B\left(R + \tau E_2^T E_2\right)^{-1} B^T\Big]^{-1}\Pi_{k+1}A, \\ \Pi_{N+1} &= Q_{N+1}. \quad (44)\end{aligned}$$

The solution to this difference equation is required to satisfy the following conditions:

$$\rho(\Pi_{k+1}DD^T) < \tau, \quad \forall k, \quad (45a)$$

$$\rho(\Pi_k\Sigma_k) < \tau, \quad \forall k. \quad (45b)$$

Applying the results of (Whittle, 1981) and (Collings *et al.*, 1996) to the risk sensitive control problem (39), we obtain the following proposition:

Proposition 1. *Let the constant $\tau > 0$ be given and suppose Σ_k, K_k, $\hat{x}(k)$ and Π_k are defined as above, and the conditions (41), (45) are satisfied. Then $\tilde{W}_\tau$, the optimal value of the risk sensitive control problem (39), is given by*

$$\begin{aligned}\tilde{W}_\tau &= \frac{1}{2\tau}\check{x}_0^T\left(\Pi_0^{-1} - \frac{\Sigma_0}{\tau}\right)^{-1}\check{x}_0 - \frac{1}{2}\log[\det(\Sigma_0)] \\ &\quad - \frac{1}{2}\sum_{k=0}^{N}\log\Bigg[\det(\Sigma_{k+1}) \\ &\qquad \times \det\left(\Sigma_k^{-1} - \frac{Q}{\tau} - E_1^T E_1\right)\Bigg] \\ &\quad - \frac{1}{2}\sum_{k=0}^{N}\log\left[\det\left(I - \frac{\Lambda_k}{\tau}\right)\right] \\ &\quad - \frac{1}{2}\log\left[\det(\Sigma_{N+1}^{-1} - \frac{Q_{N+1}}{\tau})\right], \quad (46)\end{aligned}$$

where

$$\begin{aligned}\Lambda_k &= K_k\left[I + C\left(\Sigma_k^{-1} - \frac{Q}{\tau} - E_1^T E_1\right)^{-1} C^T\right] \\ &\quad \times K_k^T\left(I - \frac{\Pi_{k+1}\Sigma_{k+1}}{\tau}\right)^{-1}\Pi_{k+1}.\end{aligned}$$

Furthermore, the corresponding output feedback optimal control law is given by

$$\begin{aligned}u(k) &= -(R + \tau E_2^T E_2)^{-1}B^T\Bigg[I + \Pi_{k+1} \\ &\quad \times B\left(R + \tau E_2^T E_2\right)^{-1} B^T - \frac{\Pi_{k+1}DD^T}{\tau}\Bigg]^{-1} \\ &\quad \times \Pi_{k+1}A\left(I - \frac{\Sigma_k\Pi_k}{\tau}\right)^{-1}\hat{x}(k)\end{aligned}$$

for $k = 0, 1, \ldots, N$.

We can use the above proposition to solve the minimax optimal control problem (34) in the output feedback linear quadratic Gaussian case. This is achieved by optimizing over the constant $\tau > 0$ to find the minimum in (38). This formula then defines the minimax optimal LQG cost. For this optimal value of τ, the corresponding minimax LQG controller is obtained as in the above proposition.

6. Illustrative Example

In this section, we present an example to illustrate the theory developed above. For the example under considera-

tion, the perturbed system (7) is defined by the equations

$$x(k+1) = \begin{bmatrix} 1.2709 & -0.0553 \\ 0.4973 & 0.9394 \end{bmatrix} x(k) + \begin{bmatrix} 0.2157 \\ 0.4367 \end{bmatrix} u(k) + \begin{bmatrix} 0.2157 \\ 0.4367 \end{bmatrix} \bar{w}(k),$$

$$z(k) = 0.5u(k),$$

$$y(k) = \begin{bmatrix} -200 & 100 \end{bmatrix} x(k) + \bar{v}(k). \tag{47}$$

We consider this system on the finite time interval $[0, N]$ where $N = 500$. The reference noise signals $w(k)$ and $v(k)$ are assumed to be Gaussian white noise signals with unity covariance matrices. Also, the initial condition $x(0)$ is assumed to be a zero mean Gaussian random vector with the covariance matrix $\Sigma_0 = 10^{-4} \times I$. The quadratic cost functional (24) is such that

$$Q = \frac{1}{4} \begin{bmatrix} 1 & -1 \\ -1 & 1 \end{bmatrix}, \quad R = 10^{-4},$$

$$Q_{N+1} = 10^{-3} \begin{bmatrix} 0.625 & -0.275 \\ -0.275 & 0.125 \end{bmatrix}.$$

We will apply our minimax LQG technique to the stochastic uncertain system defined by (47) and the corresponding relative entropy constraint (8). Also, the constant $d > 0$ is chosen to be $d = 10^{-8}$. The motivation for the uncertainty structure defined by the system (47) can be seen by recalling that the relative entropy constraint (8) will be satisfied if the corresponding SQC is satisfied as in (22). Furthermore, this SQC will be satisfied if we have $w(k) = \Delta z(k)$ where Δ is a constant but unknown matrix which satisfies the norm bound

$$\Delta' \Delta \leq I. \tag{48}$$

In this example, we write $\Delta = \left[\begin{smallmatrix} \Delta_1 \\ \Delta_2 \end{smallmatrix}\right]$ and then the uncertain system can be represented as in the block diagram shown in Fig. 4. In this block diagram, the nominal system is described by the state equations (47). In order to construct a minimax LQG controller for this example, we solve the Riccati equations (40), (44) for different values of the parameter $\tau > 0$ so that the optimal minimax cost can be obtained as in (38). We then plot the quantity $\tau \left(\tilde{W}_\tau + d\right)$ as a function of τ. This plot is shown in Fig. 5. From this plot, we choose the optimal value of the parameter τ to be $\tau = 1.17$. With the optimal value of τ, the corresponding minimax optimal LQG controller is constructed according to the equations (42), (43), (47).

It is of interest to compare the closed loop value of the cost function (31) for the standard LQG controller

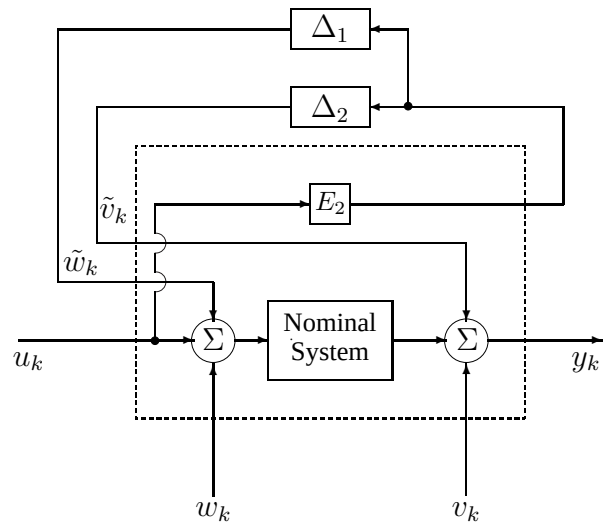

Fig. 4. Uncertain system block diagram.

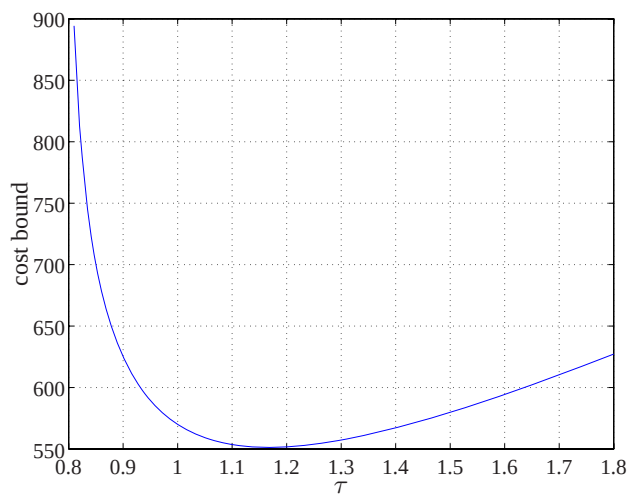

Fig. 5. Cost bound $\tau \left(\tilde{W}_\tau + d\right)$ versus the parameter τ.

(which is constructed from the LQR optimal controller and a Kalman filter), and the minimax LQG controller in the case of a constant uncertain parameter Δ_1 satisfying the condition (48). We assume that $\Delta_2 = 0$ in this comparison. A plot of the closed loop cost versus the uncertain parameter Δ_1 is shown in Fig. 6. From this plot it can be seen that for the nominal system corresponding to $\Delta_1 = 0$, the standard LQG controller is slightly better than the minimax LQG controller. This is to be expected since the standard LQG controller is optimal for the nominal system. However, when considered over the range of uncertainties, $\Delta_1 \in [-1\ 1]$, the minimax LQG controller is much better than the standard LQG controller.

7. Conclusions

In this paper, we presented an overview of the main ideas underlying the emerging theory of minimax LQG control.

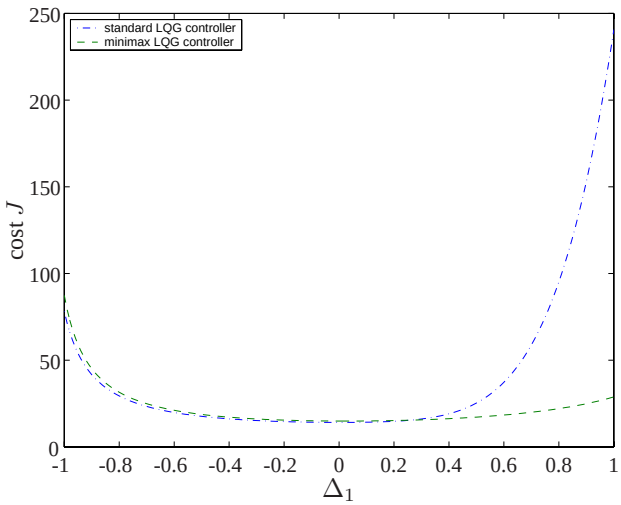

Fig. 6. Closed loop cost versus the real uncertain parameter Δ_1.

A key feature of this approach to control system design is the use of a relative entropy constraint uncertainty description. There are two main motivations for this uncertainty description. First, it provides a natural stochastic generalization of the deterministic SQC uncertainty description. In particular, it constrains the probability distribution of uncertainty signals rather than the signals themselves as in the deterministic SQC case. The second main advantage of the relative entropy uncertainty description comes from the duality between relative entropy and free energy. This enables the output feedback minimax LQG control problem to be converted into an equivalent output feedback risk sensitive control problem which can be solved using the standard Riccati equation methods. Thus, the relative entropy constraint uncertainty description has the significant advantage that the controller synthesis problem has a tractable solution even in the output feedback case.

It should also be noted that the ideas of minimax LQG control can also be extended to problems of minimax optimal filtering. This issue is pursued in the papers (Boel *et al.*, 2002; Ugrinovskii and Petersen, 1999b; 2002b; Yoon *et al.*, 2005).

It is of interest to compare the results presented in this paper on minimax LQG control with the results which can be obtained in a deterministic setting. In the paper (Savkin and Petersen, 1995), a minimax control problem was considered in a deterministic setting in which uncertainty was described by integral quadratic constraints. However, this result was only applicable to the state feedback case and also leads to a state feedback control law which is dependent on the initial condition of the system. The papers (Savkin and Petersen, 1996; 1997) also considered the control of deterministic uncertain systems described by integral quadratic constraints in order to minimize a quadratic cost functional in the measurement feedback case. However, these results were only able to give bounds on the closed loop cost functional and were not minimax optimal control results.

It is of interest to note that in the infinite horizon case, the standard LQG problem can be formulated as a deterministic H_2 optimal control problem. To date, there is no analogous result for the minimax LQG problem considered in this paper, although this would be an interesting area for future research.

References

Boel R.K., James M.R. and Petersen I.R. (2002): *Robustness and risk sensitive filtering*. — IEEE Trans. Automat. Contr., Vol. 47, No. 3, pp. 451–461.

Collings I.B., James M.R. and Moore J.B. (1996): *An information-state approach to risk-sensitive tracking problems*. — J. Math. Syst. Estim. Contr., Vol. 6, No. 3, pp. 1–24.

Dai Pra P., Meneghini L. and Runggaldier W.J. (1996): *Connections between stochastic control and dynamic games*. — Math. Contr. Syst. Signals, Vol. 9, No. 2, pp. 303–326.

Doyle J., Packard A. and Zhou K. (1991): *Review of LFT's, LMI's and μ*. — Proc. 30-th IEEE Conf. *Decision on Control*, Brighton, England, pp. 1227–1232.

Dupuis P. and Ellis R. (1997): *A Weak Convergence Approach to the Theory of Large Deviations*. — New York: Wiley.

Dupuis P., James M.R. and Petersen I.R. (2000): *Robust properties of risk-sensitive control*. — Math. Contr. Signals, Syst., Vol. 13, No. 4, pp. 318–332.

Horowitz I. (1963): *Synthesis of Feedback Systems*. — New York: Academic Press.

Jacobson D.H. (1973): *Optimal stochastic linear systems with exponential performance criteria and their relation to deterministic differential games*. — IEEE Trans. Automat. Contr., Vol. 18, No. 2, pp. 124–131.

Luenberger D.G. (1969): *Optimization by Vector Space Methods*. — New York: Wiley.

Moheimani S.O.R., Savkin A.V. and Petersen I.R. (1997): *Minimax optimal control of discrete-time uncertain systems with structured uncertainty*. — Dynam. Contr., Vol. 7, No. 1, pp. 5–24.

Petersen I.R. and James M.R. (1996): *Performance analysis and controller synthesis for nonlinear systems with stochastic uncertainty constraints*. — Automatica, Vol. 32, No. 7, pp. 959–972.

Petersen I.R., James M.R. and Dupuis P. (2000a): *Minimax optimal control of stochastic uncertain systems with relative entropy constraints*. — IEEE Trans. Automat. Contr., Vol. 45, No. 3, pp. 398–412.

Petersen I.R., Ugrinovski V. and Savkin A.V. (2000b): *Robust Control Design using H^∞ Methods*. — London: Springer.

Savkin A.V. and Petersen I.R. (1995): *Minimax optimal control of uncertain systems with structured uncertainty*. — Int. J. Robust Nonlin. Contr., Vol. 5, No. 2, pp. 119–137.

Savkin A.V. and Petersen I.R. (1996): *Uncertainty averaging approach to output feedback optimal guaranteed cost control of uncertain systems*. — J. Optim. Th. Applic., Vol. 88, No. 2, pp. 321–337.

Savkin A.V. and Petersen I.R. (1997): *Output feedback guaranteed cost control of uncertain systems on an infinite time interval*. — Int. J. Robust Nonlin. Contr., Vol. 7, No. 1, pp. 43–58.

Ugrinovskii V.A. and Petersen I.R. (1997): *Infinite-horizon minimax optimal control of stochastic partially observed uncertain systems*. — Proc. *Control 97 Conference*, Sydney, Australia, pp. 616–621.

Ugrinovskii V.A. and Petersen I.R. (1999a): *Finite horizon minimax optimal control of stochastic partially observed time varying uncertain systems*. — Math. Contr., Signals Syst., Vol. 12, No. 1, pp. 1–23.

Ugrinovskii V.A. and Petersen I.R. (1999b): *Guaranteed cost LQG filtering for stochastic discrete time uncertain systems via risk-sensitive control*. — Proc. IEEE Conf. *Decision and Control*, Phoenix, AZ, pp. 564–569.

Ugrinovskii V.A. and Petersen I.R. (2001a): *Minimax LQG control of stochastic partially observed uncertain systems*. — SIAM J. Contr. Optim., Vol. 40, No. 4, pp. 1189–1226.

Ugrinovskii V.A. and Petersen I.R. (2001b): *Robust stability and performance of stochastic uncertain systems on an infinite time interval*. — Syst. Contr. Lett., Vol. 44, No. 4, pp. 291–308.

Ugrinovskii V.A. and Petersen I.R. (2002a): *Robust output feedback stabilization via risk-sensitive control*. — Automatica, Vol. 38, No. 6, pp. 945–955.

Ugrinovskii V. and Petersen I.R. (2002b): *Robust filtering of stochastic uncertain systems on an infinite time horizon*. — Int. J. Contr., Vol. 75, No. 8, pp. 614–626.

Whittle P. (1981): *Risk-sensitive linear/quadratic/Gaussian control*. — Adv. Appl. Prob., Vol. 13, No. 4, pp. 764–777.

Xie L., Ugrinovski V.A. and Petersen I.R. (2004a): *Finite horizon robust state estimation for uncertain finite-alphabet hidden markov models with conditional relative entropy constraints*. — Proc. 43-rd IEEE Conf. *Decision and Control*, Atlantis, Paradise Island, Bahamas, (on CD-ROM).

Xie L., Ugrinovski V.A. and Petersen I.R. (2004b): *Probability distances between finite-alphabet hidden markov models*. — Proc. 2-nd IFAC Symp. *System, Structure and Control*, Oaxaca, Mexico, (on CD-ROM).

Xie L., Ugrinovskii V.A. and Petersen I.R. (2005a): *Probabilistic distances between finite-state finite-alphabet hidden Markov models*. — IEEE Trans. Automat. Contr., Vol. 50, No. 4, pp. 505–511.

Xie L., Ugrinovskii V.A. and Petersen I.R. (2005b): *A duality relationship for regular conditional relative entropy*. — Proc. 16-th IFAC World Congress, Prague, Czech Republic, (on CD-ROM).

Yoon M. and Ugrinovskii V. (2003): *Robust tracking problem for continuous time stochastic uncertain systems*. — Proc. 42-nd IEEE Conf. *Decision and Control*, Hawaii, pp. 282–287.

Yoon M.G., Ugrinovskii V.A. and Petersen I.R. (2004): *Robust finite horizon minimax filtering for stochastic discrete time uncertain systems*. — Syst. Contr. Lett., Vol. 52, No. 2, pp. 99–112.

Yoon M.G., Ugrinovskii V.A. and Petersen I.R. (2005): *On the worst disturbance of minimax optimal control*. — Automatica, Vol. 41, No. 5, pp. 847–855.

Received: 31 May 2005
Revised: 24 May 2006